OriGene Technologies, Inc.
9620 Medical Center Drive, Ste 200
Rockville, MD 20850, US
Phone: +1-888-267-4436
https://www.origene.com
techsupport@origene.com
EU: info-de@origene.com
CN: techsupport@origene.cn

Product datasheet for RC600002

EGFR (NM_201282) Human Tagged ORF Clone

Product data:

Product Type:	Expression Plasmids
Product Name:	EGFR (NM_201282) Human Tagged ORF Clone
Tag:	DDK-His
Symbol:	EGFR
Synonyms:	ERBB; ERBB1; ERRP; HER1; mENA; NISBD2; PIG61
Vector:	pCMV6-XL5-DDK-His (PS100068)
E. coli Selection:	Ampicillin (100 ug/mL)
Cell Selection:	None

View online »

This product is to be used for laboratory only. Not for diagnostic or therapeutic use.
©2022 OriGene Technologies, Inc., 9620 Medical Center Drive, Ste 200, Rockville, MD 20850, US

ORF Nucleotide Sequence:

>RC600002 representing leader sequence plus the extracellular domain region of NM_201282
Red=Cloning site Blue=ORF Green=Tags(s)

GTAATACGACTCACTATAGGGCGGCCGCGAATTCGTCGACTGGATCTGGTACCGAGGAGATCCGCCGCCG
CGATCGCC

ATGCGACCCTCCGGGACGGCCGGGGCAGCGCTCCTGGCGCTGCTGGCTGCGCTCTGCCCGGCGAGTCGGG
CTCTGGAGGAAAAGAAAGTTTGCCAAGGCACGAGTAACAAGCTCACGCAGTTGGGCACTTTTGAAGATCA
TTTTCTCAGCCTCCAGAGGATGTTCAATAACTGTGAGGTGGTCCTTGGGAATTTGGAAATTACCTATGTG
CAGAGGAATTATGATCTTTCCTTCTTAAAGACCATCCAGGAGGTGGCTGGTTATGTCCTCATTGCCCTCA
ACACAGTGGAGCGAATTCCTTTGGAAAACCTGCAGATCATCAGAGGAAATATGTACTACGAAAATTCCTA
TGCCTTAGCAGTCTTATCTAACTATGATGCAAATAAAACCGGACTGAAGGAGCTGCCCATGAGAAATTTA
CAGGAAATCCTGCATGGCGCCGTGCGGTTCAGCAACAACCCTGCCCTGTGCAACGTGGAGAGCATCCAGT
GGCGGGACATAGTCAGCAGTGACTTTCTCAGCAACATGTCGATGGACTTCCAGAACCACCTGGGCAGCTG
CCAAAAGTGTGATCCAAGCTGTCCCAATGGGAGCTGCTGGGGTGCAGGAGAGGAGAACTGCCAGAAACTG
ACCAAAATCATCTGTGCCCAGCAGTGCTCCGGGCGCTGCCGTGGCAAGTCCCCCAGTGACTGCTGCCACA
ACCAGTGTGCTGCAGGCTGCACAGGCCCCCGGGAGAGCGACTGCCTGGTCTGCCGCAAATTCCGAGACGA
AGCCACGTGCAAGGACACCTGCCCCCCACTCATGCTCTACAACCCCACCACGTACCAGATGGATGTGAAC
CCCGAGGGCAAATACAGCTTTGGTGCCACCTGCGTGAAGAAGTGTCCCCGTAATTATGTGGTGACAGATC
ACGGCTCGTGCGTCCGAGCCTGTGGGGCCGACAGCTATGAGATGGAGGAAGACGGCGTCCGCAAGTGTAA
GAAGTGCGAAGGGCCTTGCCGCAAAGTGTGTAACGGAATAGGTATTGGTGAATTTAAAGACTCACTCTCC
ATAAATGCTACGAATATTAAACACTTCAAAAACTGCACCTCCATCAGTGGCGATCTCCACATCCTGCCGG
TGGCATTTAGGGGTGACTCCTTCACACATACTCCTCCTCTGGATCCACAGGAACTGGATATTCTGAAAAC
CGTAAAGGAAATCACAGGGTTTTTGCTGATTCAGGCTTGGCCTGAAAACAGGACGGACCTCCATGCCTTT
GAGAACCTAGAAATCATACGCGGCAGGACCAAGCAACATGGTCAGTTTTCTCTTGCAGTCGTCAGCCTGA
ACATAACATCCTTGGGATTACGCTCCCTCAAGGAGATAAGTGATGGAGATGTGATAATTTCAGGAAACAA
AAATTTGTGCTATGCAAATACAATAAACTGGAAAAAACTGTTTGGGACCTCCGGTCAGAAAACCAAAATT
ATAAGCAACAGAGGTGAAAACAGCTGCAAGGCCACAGGCCAGGTCTGCCATGCCTTGTGCTCCCCCGAGG
GCTGCTGGGGCCCGGAGCCCAGGGACTGCGTCTCTTGCCGGAATGTCAGCCGAGGCAGGGAATGCGTGGA
CAAGTGCAACCTTCTGGAGGGTGAGCCAAGGGAGTTTGTGGAGAACTCTGAGTGCATACAGTGCCACCCA
GAGTGCCTGCCTCAGGCCATGAACATCACCTGCACAGGACGGGGACCAGACAACTGTATCCAGTGTGCCC
ACTACATTGACGGCCCCCACTGCGTCAAGACCTGCCCGGCAGGAGTCATGGGAGAAAACAACACCCTGGT
CTGGAAGTACGCAGACGCCGGCCATGTGTGCCACCTGTGCCATCCAAACTGCACCTACGGGTCC

ACGCGTTCAGGCGACTACAAGGATGACGACGATAAGGGATCTCATCATCACCATCACCATTAATGAGATC
TGGTACCGATATCAAGCTTGTCGACTCTAGA

This product is to be used for laboratory only. Not for diagnostic or therapeutic use.
©2022 OriGene Technologies, Inc., 9620 Medical Center Drive, Ste 200, Rockville, MD 20850, US

Protein Sequence:

>RC600002 representing signal peptide plus the extracellular domain region of NM_201282
Red=Cloning sites Green= DDK and 6XHIS Tags

MRPSGTAGAALLALLAALCPASRALEEKKVCQGTSNKLTQLGTFEDHFLSLQRMFNNCEVVLGNLEITYV
QRNYDLSFLKTIQEVAGYVLIALNTVERIPLENLQIIRGNMYYENSYALAVLSNYDANKTGLKELPMRNL
QEILHGAVRFSNNPALCNVESIQWRDIVSSDFLSNMSMDFQNHLGSCQKCDPSCPNGSCWGAGEENCQKL
TKIICAQQCSGRCRGKSPSDCCHNQCAAGCTGPRESDCLVCRKFRDEATCKDTCPPLMLYNPTTYQMDVN
PEGKYSFGATCVKKCPRNYVVTDHGSCVRACGADSYEMEEDGVRKCKKCEGPCRKVCNGIGIGEFKDSLS
INATNIKHFKNCTSISGDLHILPVAFRGDSFTHTPPLDPQELDILKTVKEITGFLLIQAWPENRTDLHAF
ENLEIIRGRTKQHGQFSLAVVSLNITSLGLRSLKEISDGDVIISGNKNLCYANTINWKKLFGTSGQKTKI
ISNRGENSCKATGQVCHALCSPEGCWGPEPRDCVSCRNVSRGRECVDKCNLLEGEPREFVENSECIQCHP
ECLPQAMNITCTGRGPDNCIQCAHYIDGPHCVKTCPAGVMGENNTLVWKYADAGHVCHLCHPNCTYGS

TRSGTRSGDYKDDDDKGSHHHHHH

Restriction Sites: SgfI-MluI

Cloning Scheme:

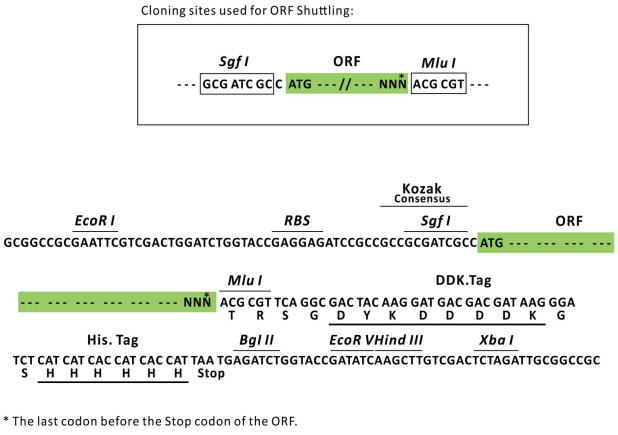

ACCN: NM_201282

ORF Size: 1884 bp

OTI Disclaimer: The molecular sequence of this clone aligns with the gene accession number as a point of reference only. However, individual transcript sequences of the same gene can differ through naturally occurring variations (e.g. polymorphisms), each with its own valid existence. This clone is substantially in agreement with the reference, but a complete review of all prevailing variants is recommended prior to use. More info

OTI Annotation: This clone was engineered to express the extra cellular domain of the protein with an expression tag. Expression varies depending on the nature of the gene.

Components: The ORF clone is ion-exchange column purified and shipped in a 2D barcoded Matrix tube containing 10ug of transfection-ready, dried plasmid DNA (reconstitute with 100 ul of water).

This product is to be used for laboratory only. Not for diagnostic or therapeutic use.
©2022 OriGene Technologies, Inc., 9620 Medical Center Drive, Ste 200, Rockville, MD 20850, US

Reconstitution Method:	1. Centrifuge at 5,000xg for 5min. 2. Carefully open the tube and add 100ul of sterile water to dissolve the DNA. 3. Close the tube and incubate for 10 minutes at room temperature. 4. Briefly vortex the tube and then do a quick spin (less than 5000xg) to concentrate the liquid at the bottom. 5. Store the suspended plasmid at -20°C. The DNA is stable for at least one year from date of shipping when stored at -20°C.
RefSeq:	NM_201282.1, NP_958439.1
RefSeq Size:	2239 bp
RefSeq ORF:	1887 bp
Locus ID:	1956
UniProt ID:	P00533
Cytogenetics:	7p11.2
Protein Families:	Adult stem cells, Cancer stem cells, Druggable Genome, ES Cell Differentiation/IPS, Protein Kinase, Secreted Protein, Stem cell relevant signaling - JAK/STAT signaling pathway, Transmembrane
Protein Pathways:	Adherens junction, Bladder cancer, Calcium signaling pathway, Colorectal cancer, Cytokine-cytokine receptor interaction, Dorso-ventral axis formation, Endocytosis, Endometrial cancer, Epithelial cell signaling in Helicobacter pylori infection, ErbB signaling pathway, Focal adhesion, Gap junction, Glioma, GnRH signaling pathway, MAPK signaling pathway, Melanoma, Non-small cell lung cancer, Pancreatic cancer, Pathways in cancer, Prostate cancer, Regulation of actin cytoskeleton
MW:	69.2 kDa
Gene Summary:	The protein encoded by this gene is a transmembrane glycoprotein that is a member of the protein kinase superfamily. This protein is a receptor for members of the epidermal growth factor family. EGFR is a cell surface protein that binds to epidermal growth factor, thus inducing receptor dimerization and tyrosine autophosphorylation leading to cell proliferation. Mutations in this gene are associated with lung cancer. EGFR is a component of the cytokine storm which contributes to a severe form of Coronavirus Disease 2019 (COVID-19) resulting from infection with severe acute respiratory syndrome coronavirus-2 (SARS-CoV-2). [provided by RefSeq, Jul 2020]

This product is to be used for laboratory only. Not for diagnostic or therapeutic use.
©2022 OriGene Technologies, Inc., 9620 Medical Center Drive, Ste 200, Rockville, MD 20850, US