**OriGene Technologies, Inc.**
9620 Medical Center Drive, Ste 200
Rockville, MD 20850, US
Phone: +1-888-267-4436
https://www.origene.com
techsupport@origene.com
EU: info-de@origene.com
CN: techsupport@origene.cn

# Product datasheet for RC214351L2

## ADCY7 (NM_001114) Human Tagged Lenti ORF Clone

## Product data:

| | |
|---|---|
| **Product Type:** | Expression Plasmids |
| **Product Name:** | ADCY7 (NM_001114) Human Tagged Lenti ORF Clone |
| **Tag:** | mGFP |
| **Symbol:** | ADCY7 |
| **Synonyms:** | AC7 |
| **Mammalian Cell Selection:** | None |
| **Vector:** | pLenti-C-mGFP (PS100071) |
| **E. coli Selection:** | Chloramphenicol (34 ug/mL) |
| **ORF Nucleotide Sequence:** | The ORF insert of this clone is exactly the same as(RC214351). |
| **Restriction Sites:** | SgfI-RsrII |
| **Cloning Scheme:** | |

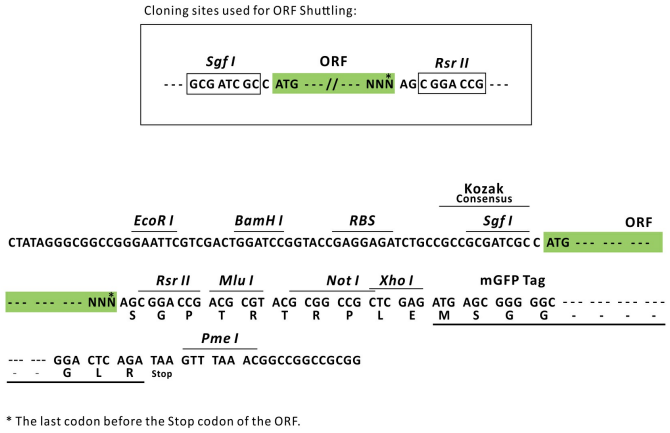


| | |
|---|---|
| **ACCN:** | NM_001114 |
| **ORF Size:** | 3240 bp |

View online »

This product is to be used for laboratory only. Not for diagnostic or therapeutic use.
©2024 OriGene Technologies, Inc., 9620 Medical Center Drive, Ste 200, Rockville, MD 20850, US

| | |
|---|---|
| **OTI Disclaimer:** | The molecular sequence of this clone aligns with the gene accession number as a point of reference only. However, individual transcript sequences of the same gene can differ through naturally occurring variations (e.g. polymorphisms), each with its own valid existence. This clone is substantially in agreement with the reference, but a complete review of all prevailing variants is recommended prior to use. More info |
| **OTI Annotation:** | This clone was engineered to express the complete ORF with an expression tag. Expression varies depending on the nature of the gene. |
| **Components:** | The ORF clone is ion-exchange column purified and shipped in a 2D barcoded Matrix tube containing 10ug of transfection-ready, dried plasmid DNA (reconstitute with 100 ul of water). |
| **Reconstitution Method:** | 1. Centrifuge at 5,000xg for 5min.<br>2. Carefully open the tube and add 100ul of sterile water to dissolve the DNA.<br>3. Close the tube and incubate for 10 minutes at room temperature.<br>4. Briefly vortex the tube and then do a quick spin (less than 5000xg) to concentrate the liquid at the bottom.<br>5. Store the suspended plasmid at -20°C. The DNA is stable for at least one year from date of shipping when stored at -20°C. |
| **RefSeq:** | NM_001114.2 |
| **RefSeq Size:** | 6157 bp |
| **RefSeq ORF:** | 3243 bp |
| **Locus ID:** | 113 |
| **UniProt ID:** | P51828 |
| **Cytogenetics:** | 16q12.1 |
| **Domains:** | CYCc |
| **Protein Families:** | Druggable Genome, Transmembrane |
| **Protein Pathways:** | Calcium signaling pathway, Chemokine signaling pathway, Dilated cardiomyopathy, Gap junction, GnRH signaling pathway, Melanogenesis, Oocyte meiosis, Progesterone-mediated oocyte maturation, Purine metabolism, Vascular smooth muscle contraction |
| **MW:** | 120.1 kDa |
| **Gene Summary:** | This gene encodes a membrane-bound adenylate cyclase that catalyses the formation of cyclic AMP from ATP and is inhibitable by calcium. The product of this gene is a member of the adenylyl cyclase class-4/guanylyl cyclase enzyme family that is characterized by the presence of twelve membrane-spanning domains in its sequences. Several transcript variants have been observed for this gene, but the full-length natures of only two have been determined so far. [provided by RefSeq, Oct 2013] |

This product is to be used for laboratory only. Not for diagnostic or therapeutic use.
©2024 OriGene Technologies, Inc., 9620 Medical Center Drive, Ste 200, Rockville, MD 20850, US

## Product images:

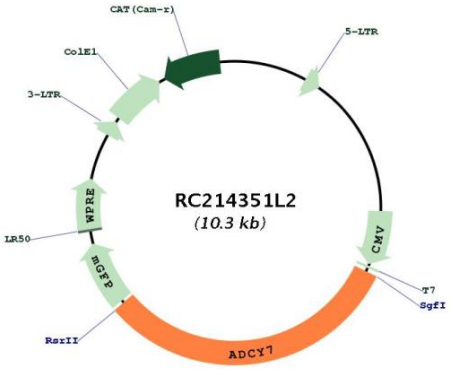


Circular map for RC214351L2

This product is to be used for laboratory only. Not for diagnostic or therapeutic use.
©2024 OriGene Technologies, Inc., 9620 Medical Center Drive, Ste 200, Rockville, MD 20850, US